550kV porcelain bottom connection type transformer bushing

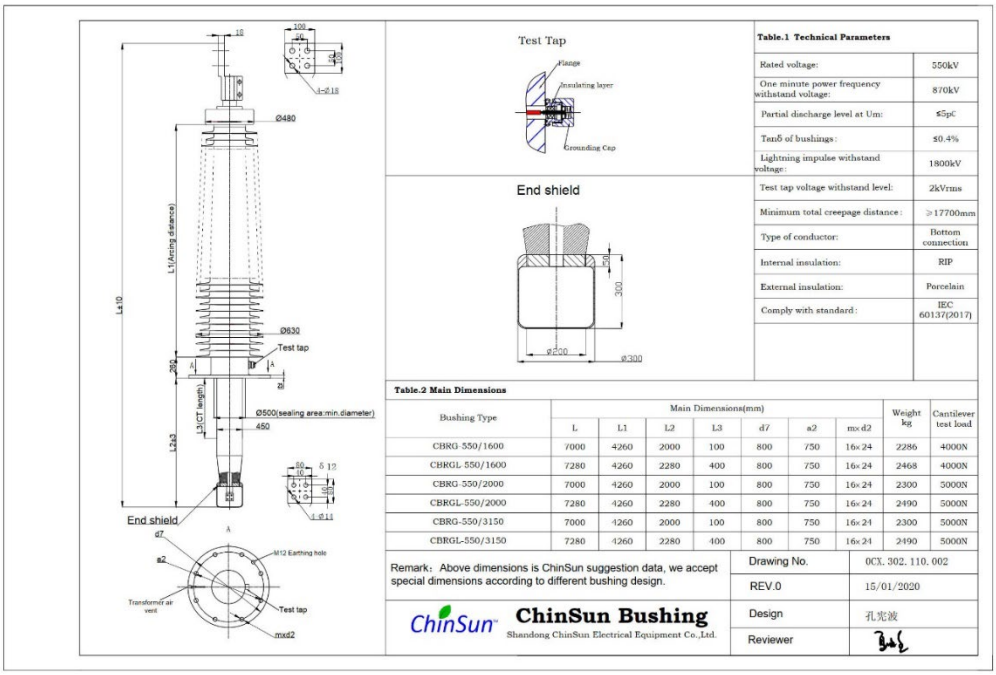

Bushing Type	Main Dimensions(mm)							Weight kg	Cantilever test load
	L	L1	L2	L3	d7	a2	mxd2		
CBRG-550/1600	7000	4260	2000	100	800	750	16×24	2286	4000N
CBRGL-550/1600	7280	4260	2280	400	800	750	16×24	2468	4000N
CBRG-550/2000	7000	4260	2000	100	800	750	16×24	2300	5000N
CBRGL-550/2000	7280	4260	2280	400	800	750	16×24	2490	5000N
CBRG-550/3150	7000	4260	2000	100	800	750	16×24	2300	5000N
CBRGL-550/3150	7280	4260	2280	400	800	750	16×24	2490	5000N

Drawing-transformer bushing-550kV porcelain-BC-ChinSun

550kV porcelain draw lead type transformer bushing

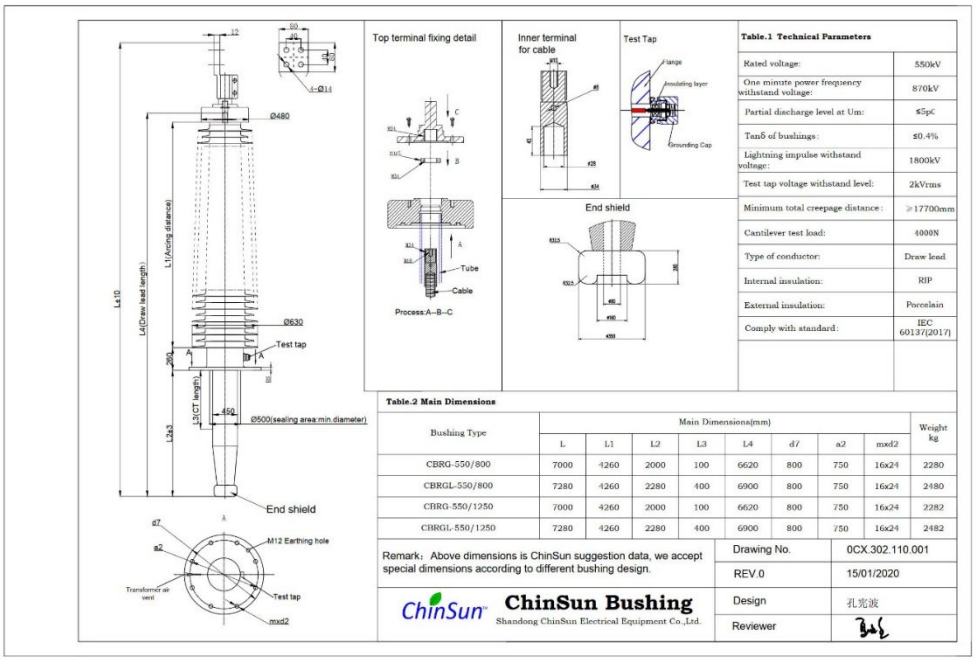

Bushing Type	Main Dimensions(mm)								Weight kg
	L	L1	L2	L3	L4	d7	a2	mxd2	
CBRG-550/800	7000	4260	2000	100	6620	800	750	16x24	2280
CBRGL-550/800	7280	4260	2280	400	6900	800	750	16x24	2480
CBRG-550/1250	7000	4260	2000	100	6620	800	750	16x24	2282
CBRGL-550/1250	7280	4260	2280	400	6900	800	750	16x24	2482

Drawing-transformer bushing-550kV_porcelain-DL-ChinSun

550kV polymer (silicone rubber) bottom connection type transformer bushing

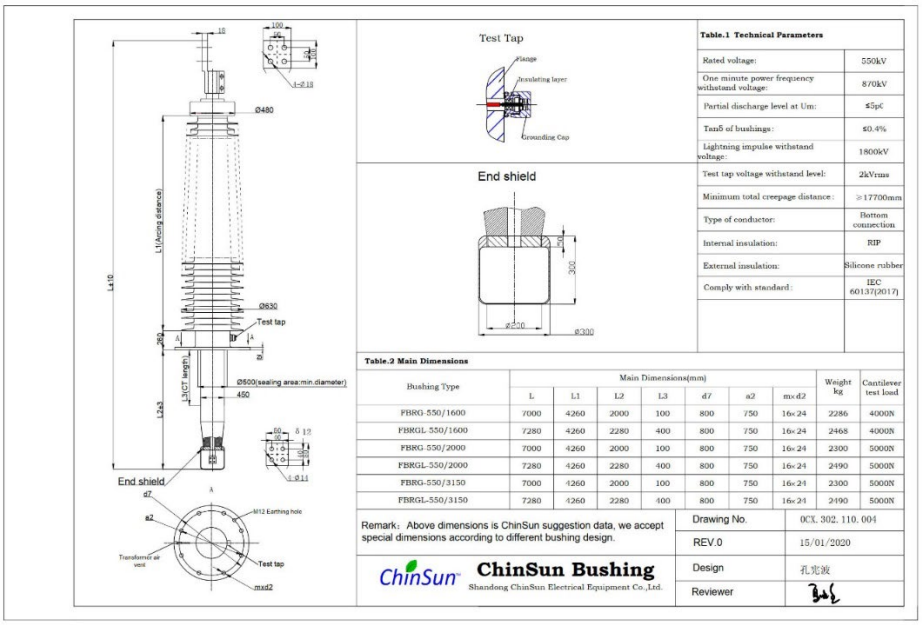

Drawing-transformer bushing-550kV silicone rubber-BC-ChinSun

550kV polymer (silicone rubber) draw lead type transformer bushing

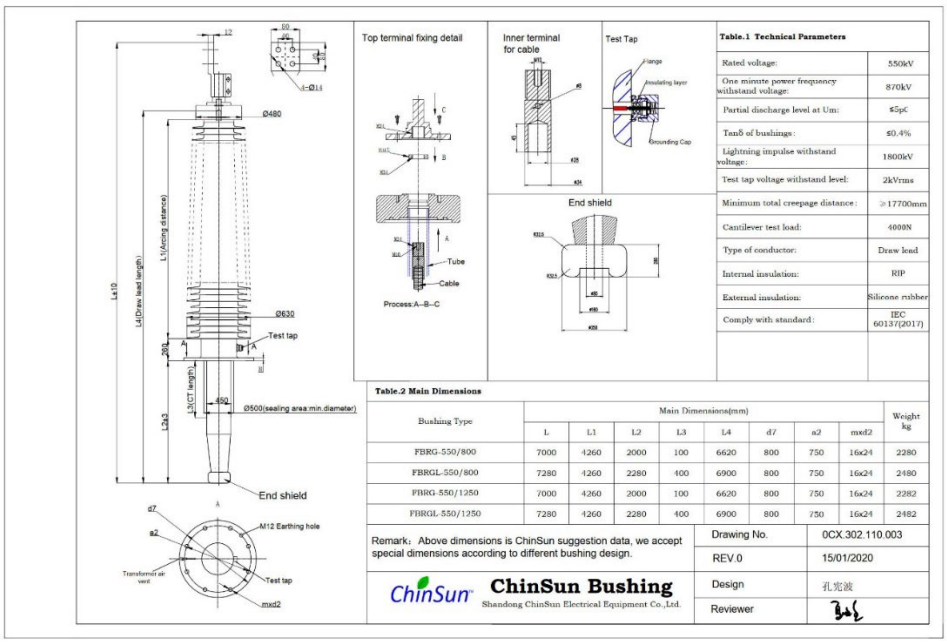

Drawing-transformer bushing-550kV_silicone rubber-DL-ChinSun